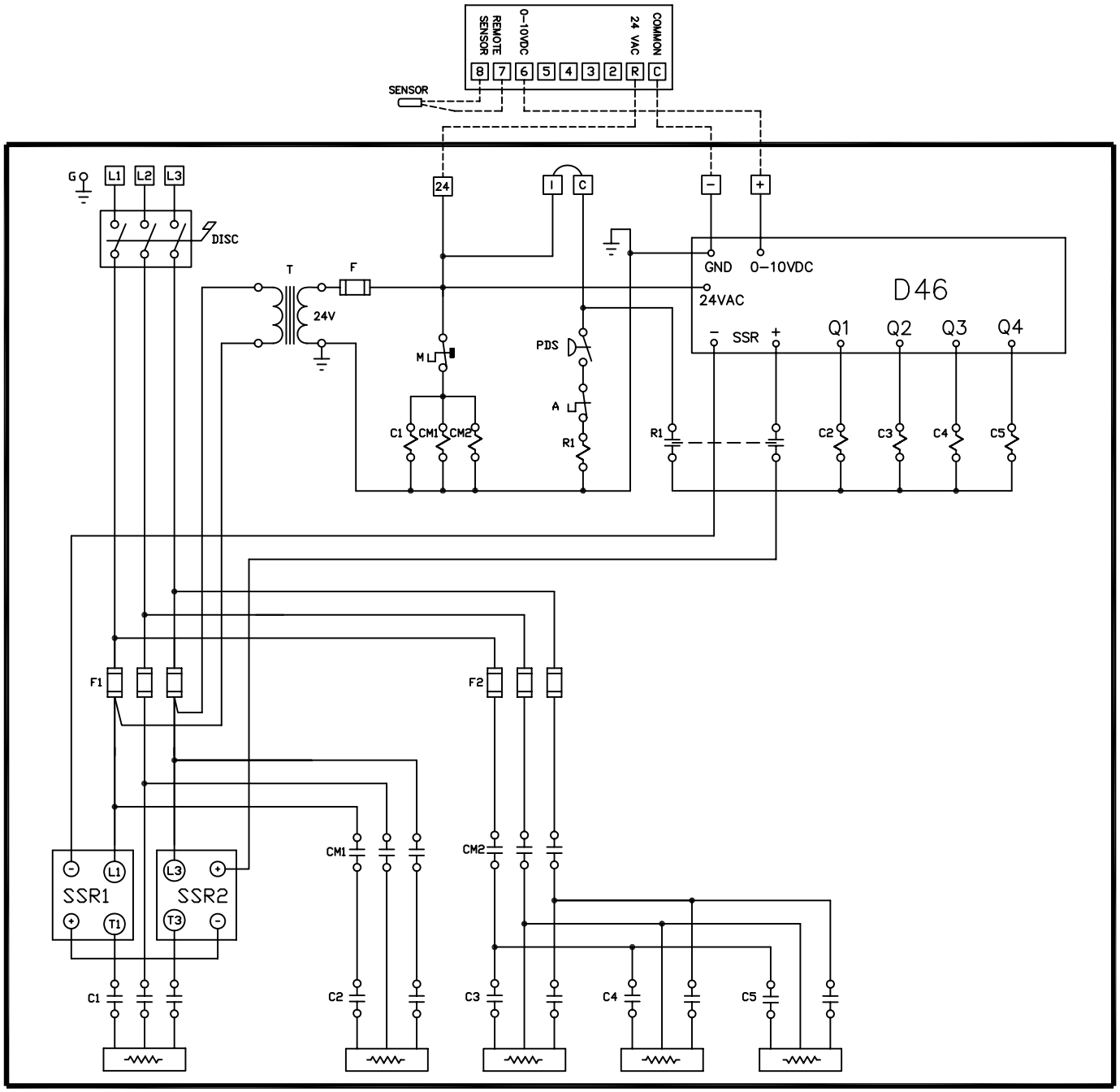

IMPORTANT

Remove jumper between terminal I & C before connecting interlocks.
Wire in accordance with local & Canadian Electrical codes. Read instructions carefully before wiring and operating.

Frame shown in heavy line represents Thermolec Electric Coil. All wiring outside this frame are "typical external wiring by others".

LEGEND

A	Automatic Reset Cut Out
C1,C2	Operating Contactors
CM	Back-up Contactor to Manual
DISC	Disconnect Switch
D46	Electronic Step Controller
F	Fuse
M	Manual Reset Cut Out
OL	Overload Relay
PDS	Pressure Differential Switch
PES	Pressure Electric Switch
PL	Pilot Light
R	Relay
SSR	Solid State Relay
T	Control Circuit Transformer
TH	Thermostat
THR	Thermal Relay
DT	Duct Thermostat
RT	Room Thermostat

TITLE/TITRE

THERMOLEC LTEE LTD
MONTREAL — CANADA

DRAWING NO. 3B57-7M2U-6200-0000

DATE	PER	